Surname	Centre Number	Candidate Number
First name(s)		0

GCSE

3601U10-1

S23-3601U10-1

MONDAY, 19 JUNE 2023 – MORNING

DESIGN AND TECHNOLOGY

Unit 1
ENGINEERING DESIGN

2 hours

For Examiner's use only		
Question	**Maximum Mark**	**Mark Awarded**
1.	**10**	
2.	**10**	
3.	**15**	
4.	**20**	
5.	**20**	
6.	**25**	
Total	**100**	

3601U101
01

ADDITIONAL MATERIALS

In addition to this examination paper, you will need a calculator.

INSTRUCTIONS TO CANDIDATES

Use black ink or black ball-point pen.

Write your name, centre number and candidate number in the spaces at the top of this page.

Answer **all** questions.

Write your answers in the spaces provided in this booklet. If you run out of space, use the continuation page(s) at the back of the booklet, taking care to number the question(s) correctly.

INFORMATION FOR CANDIDATES

The number of marks is given in brackets at the end of each question or part-question. You are advised to divide your time accordingly.

The total number of marks available is 100.

You are reminded of the need for good English and orderly, clear presentation in your answers. The quality of your written communication, including appropriate use of punctuation and grammar, will be assessed in your answer to question **4**(a).

© WJEC CBAC Ltd.

Examiner only

Answer **all** questions.

1. Study the Life Cycle Analysis diagram below.

(a) Complete the **two** missing stages of a Life Cycle Analysis. 2 × [1]

(b) Describe **one** advantage and **one** disadvantage of the use of packaging to carry products from a factory to the retailers or customers. 2 × [2]

Advantage: .....

.....

.....

.....

Disadvantage: .....

.....

.....

.....

Examiner only

(c) The image below shows a commonly used AA battery found in a torch.

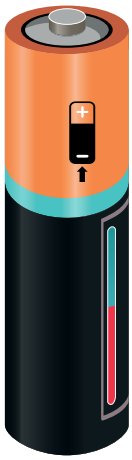

(i) Explain how the disposal of a battery in landfill will have a negative impact on the environment. [2]

.....

.....

.....

(ii) Describe an alternative portable power source that would be more environmentally friendly for use in a torch. [2]

.....

.....

.....

3601U101 03

Examiner only

2. Study the picture of the wind turbine farm below.

(a) Explain **one** reason for the importance of considering the location of the wind turbine before installation. [2]

.....

.....

.....

Examiner only

(b) Use the words below to label the image of the wind turbine. 4 × [1]

blade **controller** **gears** **generator**

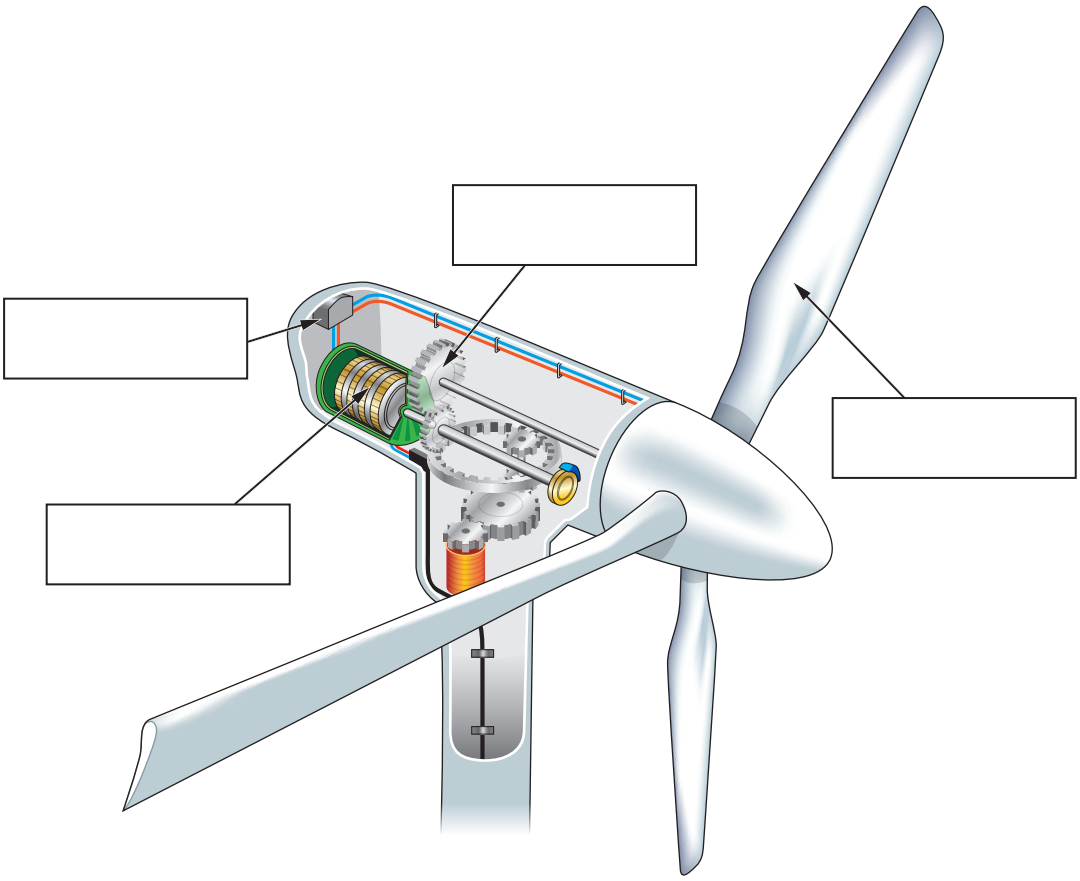

(c) Explain **one** advantage and **one** disadvantage of using a wind turbine for the generation of electricity. 2 × [2]

Advantage: .....

.....

.....

.....

Disadvantage: .....

.....

.....

.....

3601U101 05

Examiner only

3. The image below shows a biometric device for a computer.

(a) Explain **two** advantages of using biometric devices to access a computer. 2 × [2]

Advantage 1: .....

.....

Advantage 2: .....

.....

(b) Complete the table below to show whether the statements about biometrics are True or False. 4 × [1]

Statements	True or False
Biometrics are able to enhance security for devices.	
A biometric sensor can detect characteristics such as a fingerprint for identification.	
Biometrics are unable to recognise voice commands.	
Airport security use biometrics to identify a person by scanning their face.	

Examiner only

(c) (i) The biometric device cable has a copper wire with a PVC coating. Explain why these materials have been selected. [4]

.....

.....

.....

.....

.....

.....

(ii) Explain the disadvantages of using biometrics in a product. [3]

.....

.....

.....

.....

.....

3601U101 07

Examiner only

4. The images below show a pair of headphones that were sold in the year 2000 and a set of earphones that were released in 2019.

Headphones 2000

Earphones 2019

(a) Study **each** of the products and analyse how these have developed due to social and environmental forces. [10]

Marks will be awarded for the content of the answer and the quality of written communication.

.....

.....

.....

.....

.....

.....

.....

.....

.....

.....

.....

.....

.....

.....

.....

.....

Examiner only

(b) (i) Label the stages on the Product Life Cycle graph below. 4 × [1]

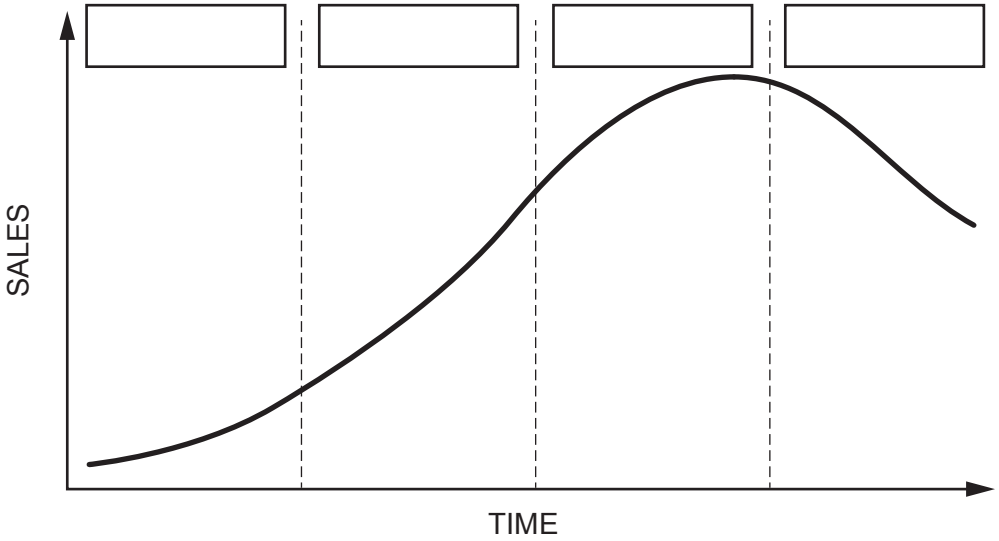

(ii) Describe what happens during the first stage of the Product Life Cycle. [2]

.....

.....

.....

(c) (i) Describe what is meant by the term 'obsolescence' in the life of a product. [2]

.....

.....

.....

(ii) Explain **one** advantage of obsolescence to the headphone/earphone manufacturer. [2]

.....

.....

.....

3601U101 09

Examiner only

5. The photograph and the cut away drawing shown below are of a spanner and a bolt.

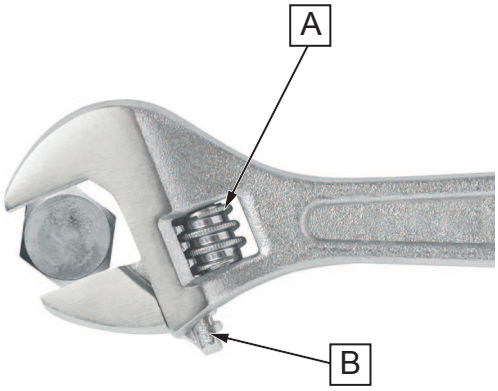

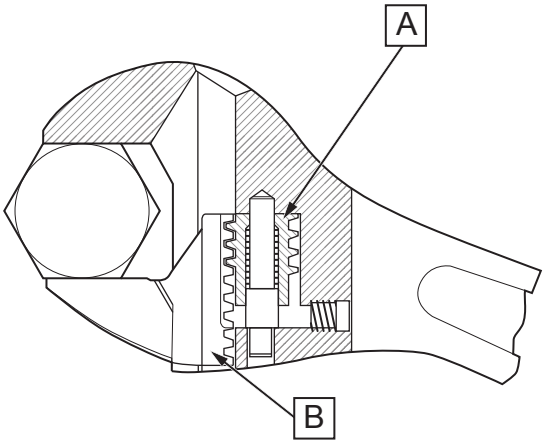

(a) There are two mechanical components on the spanner. The worm barrel is labelled **A**.

(i) Circle the correct name of the mechanical part labelled **B**. [1]

Rack gear **Spur gear** **Bevel gear**

(ii) Describe **one** advantage of the spanner above. [2]

.....

.....

.....

(iii) State and justify the manufacturing process used to produce the main body of the spanner. [2]

.....

.....

.....

Examiner only

(b) The images below show two different sized spanners.

Spanner A

Spanner B

(i) Explain which spanner would have the greater mechanical advantage when loosening a tightly fixed bolt. [2]

.....

.....

.....

(ii) Study the image of the spanner below, calculate the turning moment of the spanner in Nm. [3]

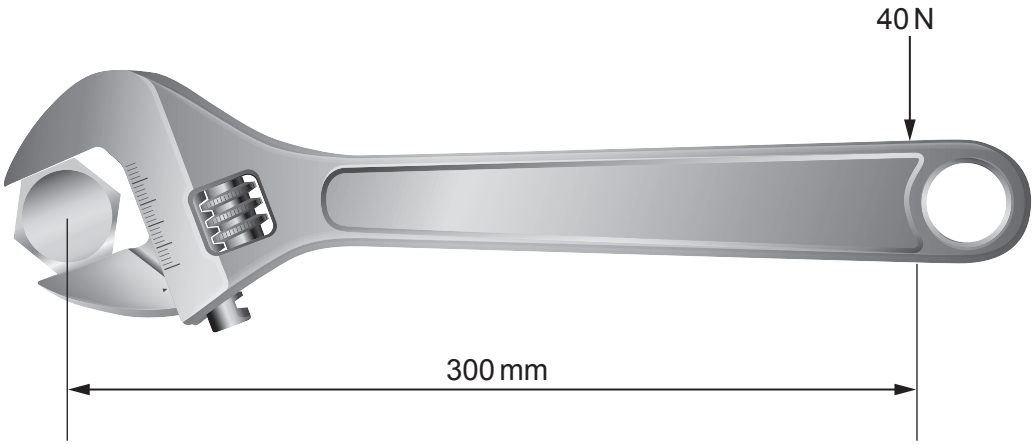

Show all workings.

.....

.....

.....

Examiner only

(c) The images below are of a cordless impact wrench in use on a car wheel. The diagram on the right-hand side shows a compound gear train used within the wrench.

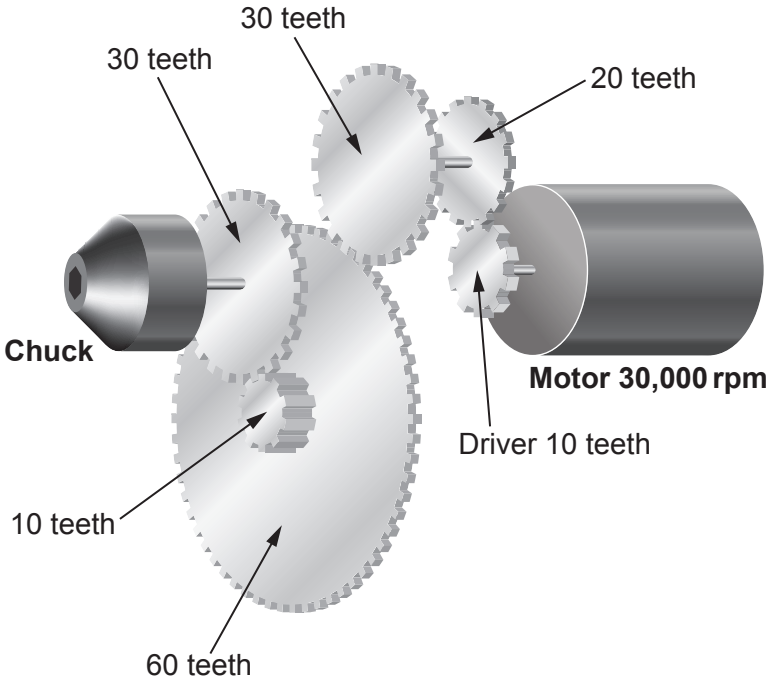

(i) Describe the benefits of the impact wrench being cordless. [2]

.....

.....

.....

(ii) Using the diagram, calculate the rotational speed of the chuck. [6]

Show all workings.

.....

.....

.....

.....

.....

.....

Examiner only

The image below shows the socket fixing for the wrench.

(iii) High-speed steel (HSS) is used for the socket fixing of the wrench. Explain why this is a suitable material for this component. [2]

.....

.....

.....

Examiner only

6. Study the photograph of a rear end of a car below.

(a) Use the correct words to complete the sentences below. [2]

PVC **translucent** **opaque** **solid** **polycarbonate**

The car's rear light cases are made from ..... . This choice of plastic is used as it is ..... and will allow light to shine through.

(b) Explain why polypropylene is a suitable material for the car bumper. [4]

.....

.....

.....

.....

.....

.....

.....

Examiner only

(c) Evaluate the use of injection moulding to manufacture the car bumper. [5]

.....

.....

.....

.....

.....

.....

.....

.....

(d) The car bumper is mass produced using automation.

(i) Circle the correct term for the use of automation when manufacturing. [1]

CAD **CAM** **CIM**

(ii) Evaluate the use of automation when mass producing vehicles. [5]

.....

.....

.....

.....

.....

.....

.....

.....

.....

(e) Many modern cars use parking sensor technology. As a car reverses and gets closer to an object a beeper sounds. As the object gets closer the beeper sound speeds up and the pitch increases.

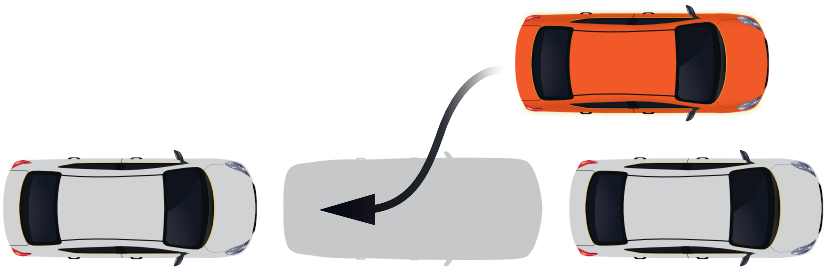

Examiner only

Complete the flowcharts shown below using the statements provided, flowchart symbols and direction arrows. [8]

Wait 0.5	**Distance <40?**	**Beeper on at 1 000Hz**
Beeper on at 500Hz	**Wait 0.25**	**Beeper on at 2 000Hz**

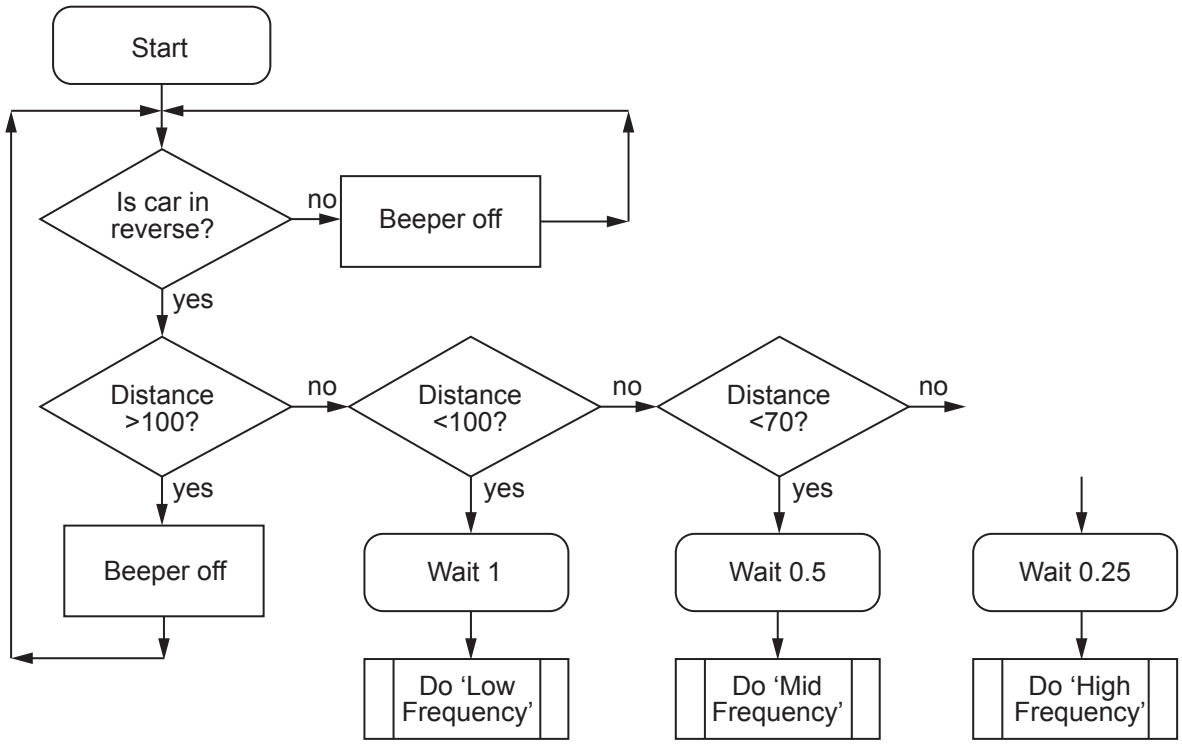

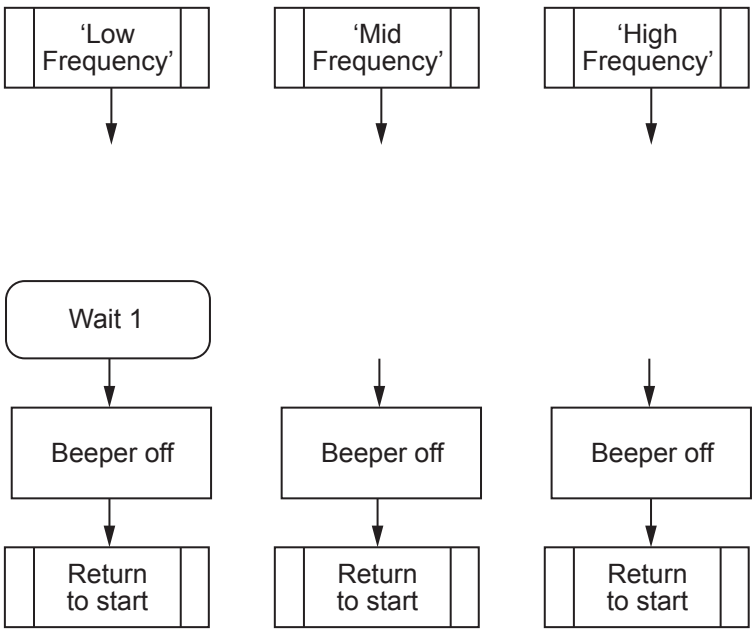

END OF PAPER

Examiner only

For continuation only.

BLANK PAGE